Department of Physics
Preliminary Exam January 2–6, 1995
Day 2: Electricity, Magnetism, and Optics
Tuesday, January 3, 1995
9:00 a.m. – 12:00 p.m.

Instructions:

1. Write the answer to each question on a separate sheet of paper. If more than one sheet is required, staple all the pages corresponding to a *single* question together in the correct order. But, do *not* staple all problems together.
2. Be sure that your identification number (*not* your name!) and the problem number are written on each problem sheet.
3. The exam time is three hours. All questions carry the same amount of credit. So you should budget your exam time carefully and accordingly.
4. Several of the questions are composed of more than one part. Note, that it is not always necessary to successfully complete one part in order to do the other parts.
5. Grades on the exam will be determined, in part, by such things as the clarity and organization of the response — the use of written statements between the lines of an algebraic proof, etc. Be sure to substantiate any answer by calculations or arguments (in complete sentences), as appropriate. Be concise, explicit, and complete.
6. The use of simple electronic calculators is permitted. (However, obtaining preprogrammed information from programmable calculators, using tables, books, papers, or any other reference material that is not provided by the exam committee, *or* any other form of cheating is strictly prohibited and punishable according to the OSU Regulations on Academic Dishonesty.)

Problem 1

(a) A conductor is made in the form of a hollow cylinder with inner and outer radii a and b, respectively. It carries a current I, uniformly distributed over the cross section. Derive expressions for the magnetic field in the three regions $r < a$, $a < r < b$, and $r > b$.

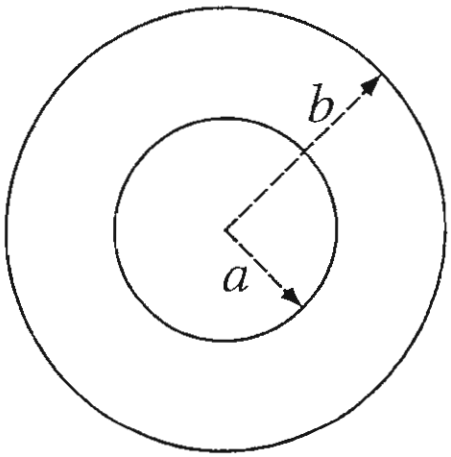

(b) If $b = 2a$, what is the magnitude and direction of the magnetic field along the original cylindrical axis if the inner cylindrical axis is displaced a distance $\frac{1}{2}a$ from the outer cylindrical axis?

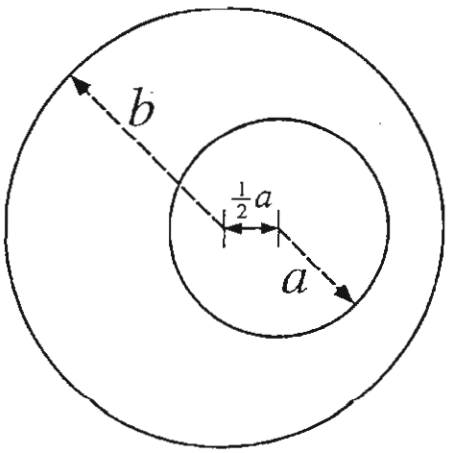

Problem 2

(a) Find the current in each resistor and find the equivalent resistance in the circuit shown below.

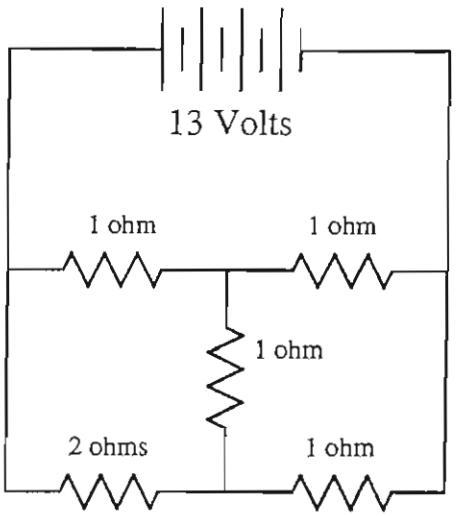

(b) Suppose each resistor is replaced with an inductor where "ohms" become "millihenrys," and the battery is an alternating current source. What are the three new network equations?

Problem 3

Consider the magnetic field produced by a system of moving charges, q_i, $i = 1, 2, \ldots, n$, at large distances from the charges.

(a) Find the vector potential $\mathbf{A}$ in terms of the magnetic moment of the system.

(b) Find the magnetic field $\mathbf{B}$.

(c) If all the charges have the same charge to mass ratio e/m and the velocities of all the charges satisfy $|\mathbf{v}_i| \ll c$, find the magnetic moment in terms of the angular momentum of the system.

Problem 4

If magnetic monopoles exist, Maxwell's equations would need to be modified:

$$\nabla \cdot \mathbf{D} = \rho_{\mathrm{e}}, \qquad -\nabla \times \mathbf{E} = \frac{\partial \mathbf{B}}{\partial t} + \mathbf{J}_{\mathrm{m}},$$

$$\nabla \cdot \mathbf{B} = \rho_{\mathrm{m}}, \qquad \nabla \times \mathbf{H} = \frac{\partial \mathbf{D}}{\partial t} + \mathbf{J}_{\mathrm{e}}.$$

Where ρ_{e} and ρ_{m} are the electric and magnetic charge densities, respectively, and $\mathbf{J}_{\mathrm{e}}$ and $\mathbf{J}_{\mathrm{m}}$ are the respective current densities.

(a) Using the symmetry of these equations, give an expression for the vector magnetic field $\mathbf{B}$ due to a point magnetic charge q_{m}.

A magnetic charge q_{m} is located at the origin. An electric charge q_{e} is initially ($t = -\infty$) located at $x = b$, $y = 0$, and $z = -\infty$, and is moving in the positive z direction with velocity v.

(b) What is the instantaneous force on the electric charge as a function of its position?

(c) The z component of the angular momentum (with respect to the origin) of the electric charge is initially zero, since p_x and p_y are both zero. In the approximation that the interaction of the two charges is small enough that we can neglect the deflection of the particle, what is the final angular momentum of the electric charge?

Possibly useful information:

$$\int_0^\infty \frac{dx}{(a^2 + x^2)^{3/2}} = \frac{1}{a^2}.$$

Problem 5

In a transmission line in which wave propagation occurs along the z-axis, the electric field $\mathbf{E}$ can be expressed as

$$\mathbf{E}(x, y, z, t) = \mathbf{E}(x, y)\, e^{-i(\omega t - kz)}.$$

Because of this, it is useful to separate $\mathbf{E}$ into a component parallel to the direction of propagation and one transverse to it:

$$\mathbf{E} = \mathbf{E}_z + \mathbf{E}_\mathrm{t},$$

where

$$\mathbf{E}_z = E_z\, \hat{\mathbf{z}}, \qquad \text{and} \qquad \mathbf{E}_\mathrm{t} = E_x\, \hat{\mathbf{x}} + E_y\, \hat{\mathbf{y}}$$

($\hat{\mathbf{x}}$, $\hat{\mathbf{y}}$ and $\hat{\mathbf{z}}$ are Cartesian unit vectors). The magnetic field $\mathbf{H}$ can be similarly decomposed. The wave equation then becomes

$$\left[\nabla_\mathrm{t}^2 + \left(\frac{\varepsilon_\mathrm{r}\, \omega^2}{c^2} - k^2\right)\right] \begin{Bmatrix} E_z \\ H_z \end{Bmatrix} = 0,$$

where $\varepsilon_\mathrm{r} \equiv \varepsilon/\varepsilon_0$ is the relative dielectric constant of the medium in the waveguide (assuming $\mu = \mu_0$) and

$$\nabla_\mathrm{t} \equiv \frac{\partial}{\partial x}\, \hat{\mathbf{x}} + \frac{\partial}{\partial y}\, \hat{\mathbf{y}}.$$

Using these expressions, along with Maxwell's equations for a charge-free region, derive expressions for $\mathbf{E}_\mathrm{t}$ and $\mathbf{H}_\mathrm{t}$ in terms of E_z and H_z.